FlameGuard® CPVC Drain & Swing Check Valves for NFPA 13D Application Only

Application: FlameGuard® CPVC Orange Swing Check Valves and PVC/CPVC True Union Drain Valves are for use in Configuring CPVC Fire Sprinkler System connection to water supply (riser/drain assembly) in NFPA 13D installations only. These valves are not UL listed and NOT for use in any other locations within the fire sprinkler system.

True Union Industrial Drain Valve With Locking Handle

Socket x Socket
CPVC Gray Valve with CPVC Orange End Connector

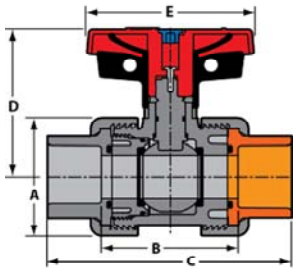

Not UL Listed

Part Number	Size	A	B	C	D	E	Approx. Wt. (Lbs.)
1822-007CFG	3/4	2-3/8	2-13/16	4-13/16	2-7/8	3-3/8	.62
1822-010CFG	1	2-5/8	2-15/16	5-3/16	3-1/8	3-7/16	.83
1822-012CFG	1-1/4	3-3/16	3-1/4	5-13/16	3-5/8	3-7/8	1.24
1822-015CFG	1-1/2	3-9/16	3-9/16	6-5/16	4	4-3/16	1.62
1822-020CFG	2	4-1/4	4-3/4	7-13/16	4-7/16	5-1/8	2.86

True Union Standard Drain Valves

Socket x Socket
PVC Gray Valve with CPVC Orange End Connector

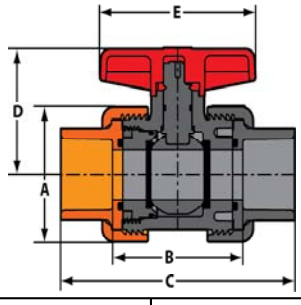

Not UL Listed

Part Number	Size	A	B	C	D	E	Approx. Wt. (Lbs.)
3622-007FG	3/4	2-3/8	2-13/16	4-13/16	2	3	.57
3622-010FG	1	2-5/8	2-15/16	5-3/16	2-5/16	3-5/16	.74

Compact 2000 Drain Valve

Socket x Socket

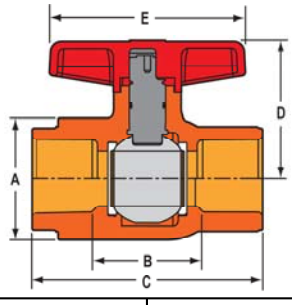

Not UL Listed

Part Number	Size	A	B	C	D	E	Approx. Wt. (Lbs.)
6622-007CO	3/4	1-3/4	1-1/2	3-1/2	2	3	.30
6622-010CO	1	2-1/16	1-11/16	3-15/16	2-5/16	3-3/8	.46